Astronomical Data Analysis Software and Systems VIII
ASP Conference Series, Vol. 172, 1999
D. M. Mehringer, R. L. Plante, and D. A. Roberts, eds.

Data Structure and Software of the UCAC-S Project

Norbert Zacharias[1], Marion I. Zacharias[2]

CTIO, 950 N.Cherry Ave., Tucson, AZ 85719,
Email: nz@ctioj8.ctio.noao.edu

Abstract. The USNO CCD Astrograph Catalog South (UCAC–S) project is a high precision astrometric survey of the entire southern hemisphere for the 7−16 magnitude range, aiming at an accuracy of 20 mas for $8-14^m$ stars. A 4k × 4k CCD is used at the back–end of a 5–element, 0.2 meter aperture astrograph. A 2–fold overlap pattern of 43,839 fields will produce 1.8 terabytes of compressed raw data, stored on tapes and CD-ROMs. The project started in January 1998 at CTIO and is scheduled for 2 years to complete. Customized Fortran routines are used throughout. The data structure, quality control procedures and software layout are described.

1. The Project

The USNO CCD Astrograph Catalog South (UCAC–S) project is a high precision astrometric survey of the entire southern hemisphere for the 7−16 magnitude range in a single bandpass (610/60 nm), (Gauss et al. 1996). The goal is to get positions accurate to 20 mas for stars in the $8-14^m$ magnitude range, and about 70 mas at the limiting magnitude (Zacharias 1997). The ACT (Urban et al. 1998) and the Hipparcos and Tycho Catalogues (ESA 1997) are used as reference (UCAC–R), supplemented by an extragalactic link program carried out in parallel mainly at the Cerro Tololo (CTIO) 0.9-meter telescope. A 4k × 4k CCD is used at the back–end of a 5–element, 0.2 meter aperture astrograph. A 2–fold overlap pattern of 43,839 fields will produce 1.8 terabytes of compressed raw data. Observing started in January 1998 at CTIO and is scheduled for 2 years to complete the southern hemisphere. An extension towards the north is planned. For more details about the project see Zacharias et al. (1997) and the web site `http://aries.usno.navy.mil/ad/ucac/ucac-s.html`.

2. Data Structure

The hardware components and the pixel data flow are shown in Fig. 1. A simple loss–less compression method (I*2 to I*1) is used for the CCD frames throughout

[1]U.S. Naval Observatory, Washington, DC

[2]Universities Space Research Association, Washington, DC

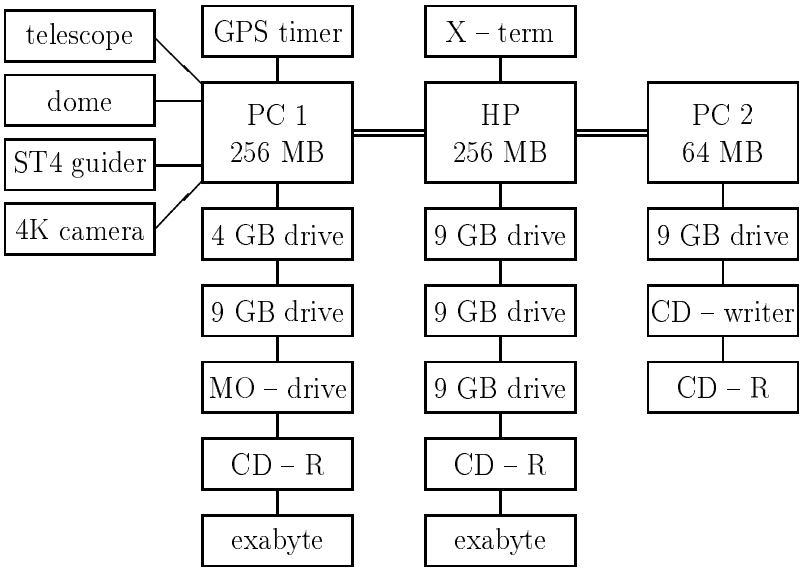

Figure 1. Hardware.

the system including storage on tapes and CD-ROMs. One set of backup tapes is shipped to Washington. The CD-ROM version is convenient for random access (manually) and is believed to be more long–term reliable than the tapes. The detection and object fit parameter data will be about 40 GB, while the final catalog is an estimated 1.5 GB for 40 million stars.

3. Observing Procedures

Observing procedures are outlined in Fig. 2. Abbreviated on–line reductions are performed immediately after a pair of frames (about 125 and 25 sec exposure on each field) have been acquired to obtain quality control statistics, which are displayed about a minute after the frames have been taken, while the automatic observing continues in parallel. The observer has the option to intervene, e.g., for changing the focus or other parameters. Complete reductions are performed the next day in batch mode (Fig. 3).

The schedule for the next night takes into account the entire observing history and adheres to strict quality tolerances for each frame.

4. Software Layout

Steps for the astrometric reductions are shown in Fig. 4. Customized Fortran routines are used throughout. ASCII files and a strict nomenclature are used for auxiliary data handling, while large astrometric data files utilize unformatted direct access structures. The raw data reduction is based on Software for Analyzing Astrometric CCDs (SAAC), (Winter 1999). The Hamburg Block Adjustment Program Package (HBAPP) previously used for photographic astrometry

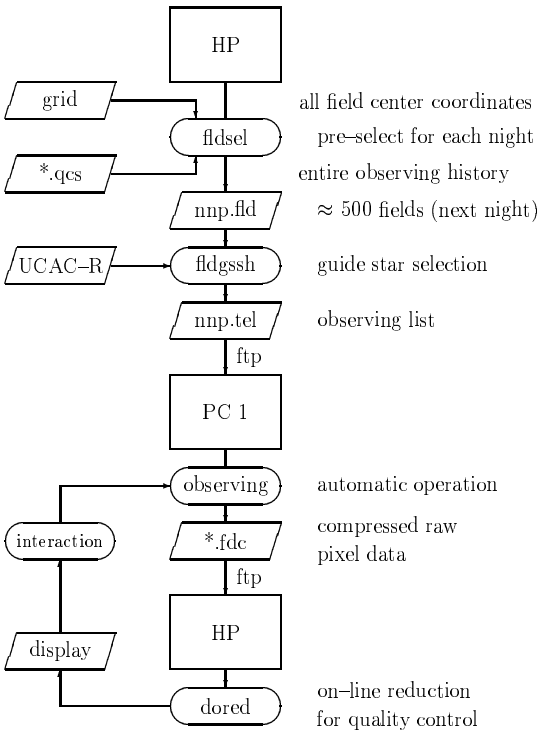

Figure 2. Scheduling and Observing.

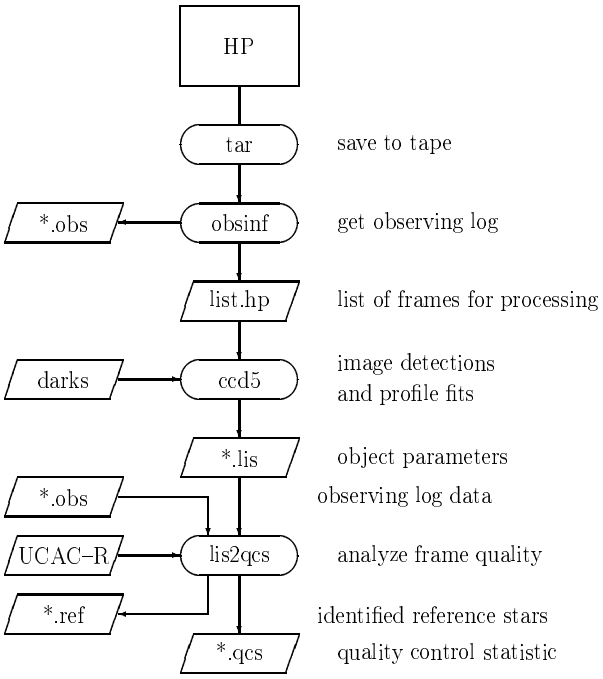

Figure 3. End of night, daily reductions.

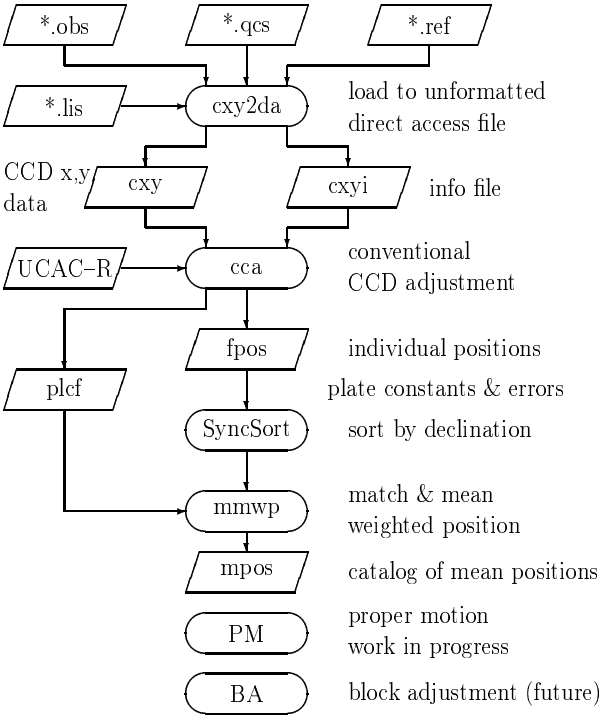

Figure 4. Astrometric reductions.

(Zacharias et al. 1996) has been adopted for this project, including a variety of PGPLOT visualizations. Block adjustment procedures will be used for the final astrometric reduction, solving for about 250,000 parameters simultaneously.

Acknowledgments. The authors wish to thank the entire UCAC-S team and the CTIO staff, in particular the observers.

References

ESA, 1997, The Hipparcos and Tycho Catalogues, (ESA publ. SP-1200) (Noordwijk: ESA)

Gauss, F. S., Zacharias, N., Rafferty, T. J., Germain, M. E., Holdenried, E. R., Pohlman, J. W., & Zacharias, M. I. 1996, BAAS, 28, 1282

Urban, S., Corbin, T. E., & Wycoff, G. L. 1998, AJ, 115, 2161

Winter, L. 1999, Ph.D. thesis, Univ. of Hamburg

Zacharias, N., 1997, AJ, 113, 1925

Zacharias, N., Germain, M. E., & Rafferty, T. J. 1997, in Proceedings Hipparcos Venice 97 (ESA publication SP-402) (Noordwijk: ESA), 177

Zacharias, N., Zacharias, M. I., Douglass, G. G., & Wycoff, G. L. 1996, AJ, 112, 2336