Astronomical Data Analysis Software and Systems VI
ASP Conference Series, Vol. 125, 1997
Gareth Hunt and H. E. Payne, eds.

An Archival System for the Observational Data Obtained at the Okayama and Kiso Observatories. II.

M. Yoshida

Okayama Astrophysical Observatory, National Astronomical Observatory of Japan, Kamogata, Okayama 719-02, Japan, E-mail: yoshida@oao.nao.ac.jp

Abstract. The Mitaka-Okayama-Kiso data Archival system second version (MOKA2) has been released. In MOKA2 the interfaces between user and the database engine contain Graphical User Interface (GUI), the SQL generator and the Client/Server system are World Wide Web (WWW) based ones: HTML, cgi, and httpd. This substantially improves its availability on the Internet and makes it easy to maintain the system. All the features developed for the first version of MOKA—e.g., the quick-look system, the name resolving system, and coordinate converter—are also available in MOKA2. MOKA2 offers the material of astronomical research as a prototype of a large-scale data archive of the next generation.

1. Introduction

MOKA was the first full-scale data archive system for the optical astronomy community in Japan (Ichikawa et al. 1995). Is was developed for the observational data taken with the Spectro-Nebulagraph (SNG; Kosugi et al. 1995) attached to the 188 cm telescope at Okayama Astrophysical Observatory and with the prime focus CCD camera of the 105 cm Schmidt telescope at Kiso Observatory.

The development of MOKA was begun in February 1994, and a public operational test started in three places (National Astronomical Observatory of Japan at Mitaka, Okayama Astrophysical Observatory, and Kiso Observatory) in June 1995. Various problems were discovered as a result of the operational test, and the development of MOKA2[1] was begun in February 1996. MOKA2 was made available to the public as a test operation in September 1996. See Horaguchi et al. (1994) and Takata et al. (1995) for detailed technology, development details, and basic idea of MOKA.

2. System Overview

The basic structure of MOKA2 is shown in Figure 1. MOKA2 contains the following three types of data/database:

[1] http://www.moka.nao.ac.jp

© Copyright 1997 Astronomical Society of the Pacific. All rights reserved.

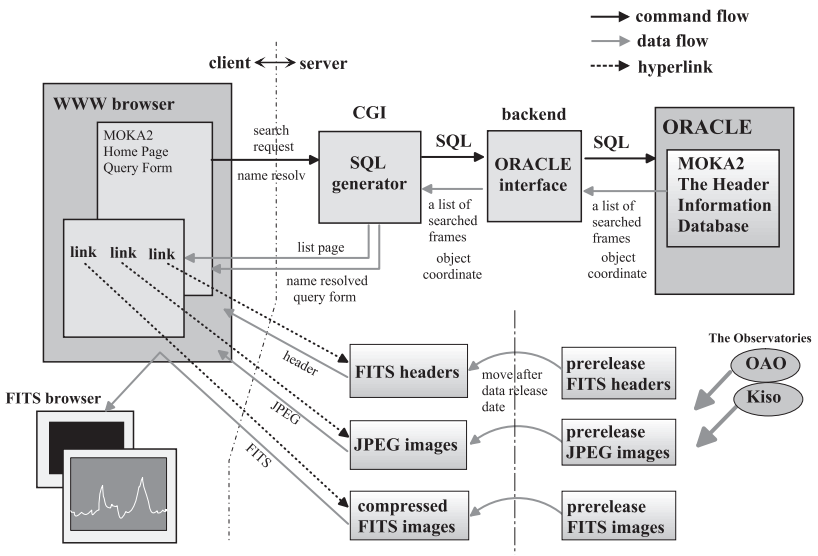

Figure 1. MOKA2 system overview.

- The header information database, which contains the principal information about each frame, is used for quick searches. This database is managed with the database management system ORACLE.
- The FITS header files which are extracted from the raw observational data.
- The quick-look image files, the size of which is reduced from the original data by binning, sampling, and rescaling. Two types of image formats are supported, FITS and JPEG. FITS format images are compressed by gzip.

The user interface is written in Hyper Text Makeup Language (HTML). The Structured Query Language (SQL) generator and the ORACLE interface shown in Figure 1 are newly developed. The SQL generator is called by a CGI program which is written in Perl. It handles the parameters of the data search constraints entered through the home page of MOKA2 (a query form) and generates a SQL command for the data search query. The ORACLE interface transports the SQL command to ORACLE, and receives the search results. The SQL generator receives those results and constructs a Web page according to the query.

3. User Interface

The home page of MOKA2 is a query form for searching the archival data. The basic layout of this page is similar to the GUI of the previous version of MOKA (Takata et al. 1995).

When the "search" button is clicked after setting the search constraints, the data which are matched to the constraints are searched in the header information database. A Web page in which the searched results are listed is then returned. Each line of the list in this Web page corresponds to one CCD frame and contains the basic information of the frame. Three hyperlinks (named

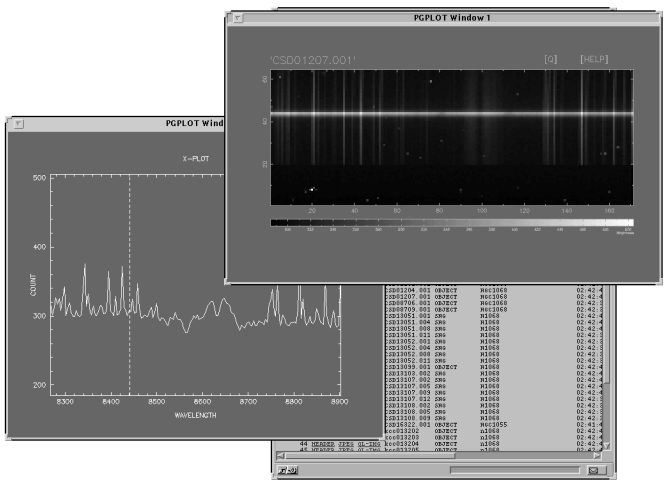

Figure 2. An example of quick-look of a compressed FITS image.

"HEADER," "JPEG," and "QL-IMG") at the head of the each line are linked to a FITS header file, a quick-look JPEG file, and a quick-look FITS file, respectively. Clicking "HEADER" allows the user to browse the original FITS header. Figure 2 shows an example of the quick-look of a compressed FITS image (QL-IMG) using the newly developed image browser (which is provided for SunOS and Solaris). This image browser can treat huge-sized (over 8000 × 8000 pixels) images.

After clicking the "Request data" button in the page, a data request form is returned as a Web page listing the results of the search. When the "Send request" button is clicked after filling the data request form, request e-mails are sent to the MOKA administrators of Okayama and Kiso observatories.

4. Name Resolver

The function of a name resolver is implemented in MOKA2. It is performed in the following two steps:

1. Convert the name of the object, which the user gives in an arbitrary format, to a standard expression.

2. Get the coordinates of the object from the database for the name resolver.

The database for the name resolver is also managed by ORACLE and currently includes eleven catalogs which were supported in the previous version of MOKA (Takata et al. 1995).

5. Future Plans

MOKA2 was developed under the HTML-CGI scheme to achieve Internet connectivity and it increased the system availability substantially. The efficiency of database access under the HTML-CGI architecture is, however, not so high,

because CGI is only an interface between a WWW server and a program on the server. Further, interactive processing through the user interface is not efficient, since the UI is fundamentally a Web page generated by the server. Java can resolve these deficiencies peculiar to HTML-CGI architecture. We therefore plan to develop the next version of MOKA in Java in order to realize more efficient database access and flexible UI.

Future plans for development of MOKA system are follows:

- Development of an advanced user interface and realization of efficient database access using Java.
- Development of an automatic data distribution system.
- Inclusion of the environmental data from the observation sites.
- Dealing with calibrated data.

Acknowledgments. The author is indebted to the development members of MOKA2, E. Nishihara, T. Horaguchi, T. Ito, T. Takata, K. Aoki, S. Yoshida, S. Ichikawa and M. Hamabe. The study on the data archival system is one of the projects promoted by the Japan Association for Information Processing in Astronomy (JAIPA). This work was supported in part under the Scientific Research Fund of Ministry of Education, Science, Sports and Culture (06554001, 07304024 and 08228223), and JAIPA Nishimura foundation. The author thanks S. Nishimura for his continuous encouragement.

References

Horaguchi, T., et al. 1994, Publ. Natl. Astron. Obs. Japan, 4, 1

Ichikawa, S., et al. 1995, in ASP Conf. Ser., Vol. 77, Astronomical Data Analysis Software and Systems IV, ed. R. A. Shaw, H. E. Payne, & J. J. E. Hayes (San Francisco: ASP), 173

Kosugi, G., et al. 1995, PASP, 107, 474

Takata, T., et al. 1995, Publ. Natl. Astron. Obs. Japan, 4, 9